Data Sheet

Article number: 2301072657
Description: E+G Handwheel
VDS.80+IR-A10

Measures

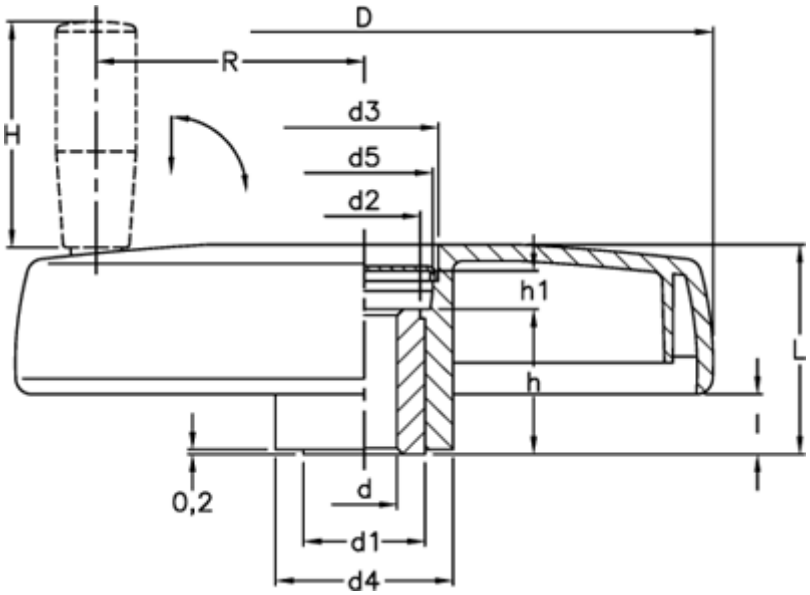

C (N m)	= 34	H	= 45
D	= 83	h	= 17
d1	= 18	h1	= 3.5
d2	= 16.0	l	= 18.5
d3	= 16.5	L	= 38
d4	= 25	L (J)	= 6
d5	= 13.5	R	= 28
d H7	= 10		

Product drawings and brochures of any kind may contain errors for which Brd. Klee A/S cannot be liable.